CONNECTOR

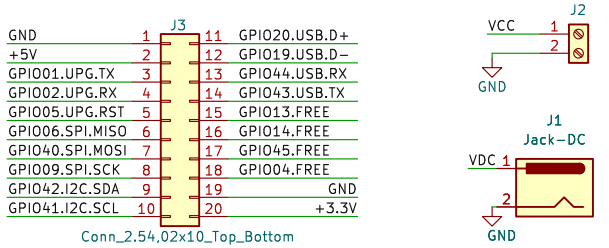

Notes:
1.J2 / OUTPUT, Phonenix contacter 3.5x2
MAXCurrent: 5A
2.J3 / OUTPUT, XH2.54 contacter 2x10
MAXCurrent: 0.2A
2.J1 / INPUT, DCJACK 2.0
5-24V, MAXCurrent: 5A

POGO PIN

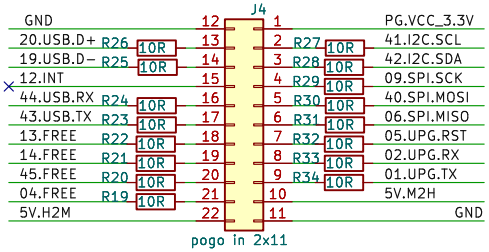

POWER

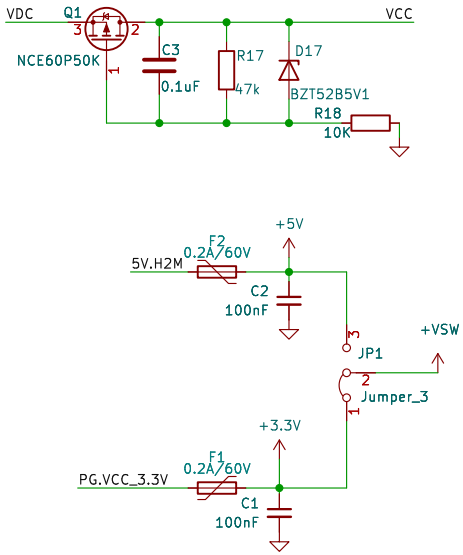

LS & ESD

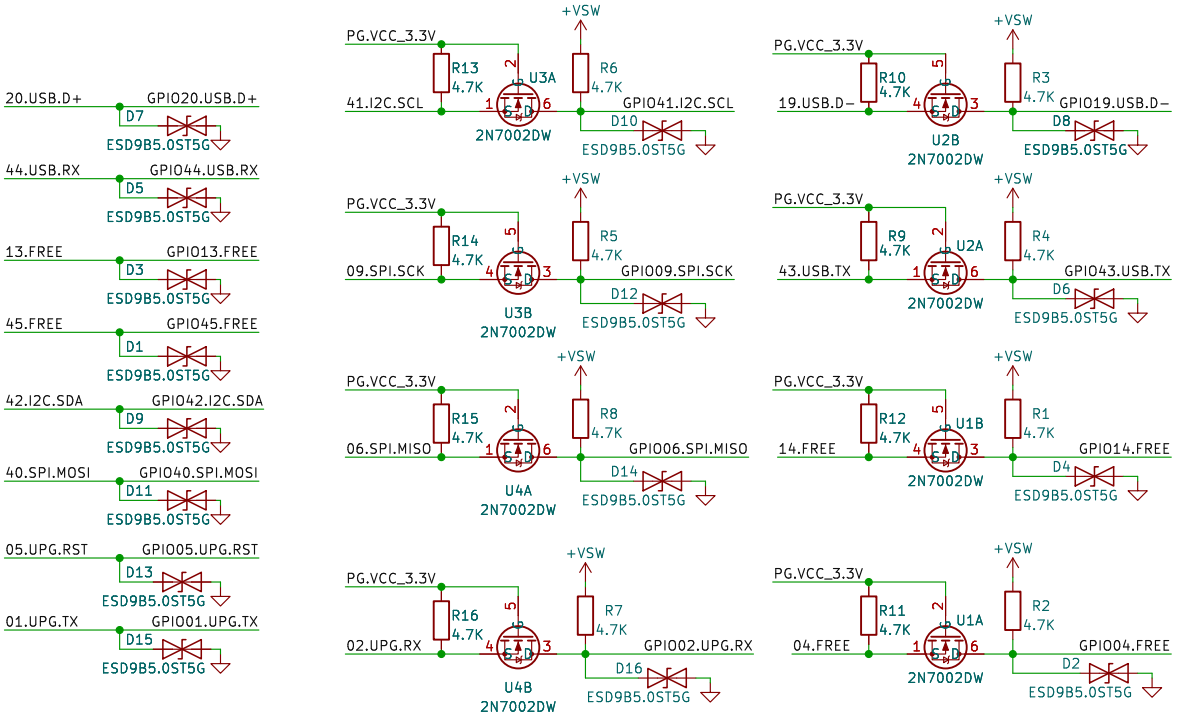

Project	WF1-RIMU	Name	Development Module	Num	0X0000	Designer	H.B	I2C	Y	UART	Y
https://rimu.me | community.rimu.me | rimu@dengtec.com						Date	2024-07-15	SPI	Y	UPGRADE	N
								Rev	0.6	A4	1/1